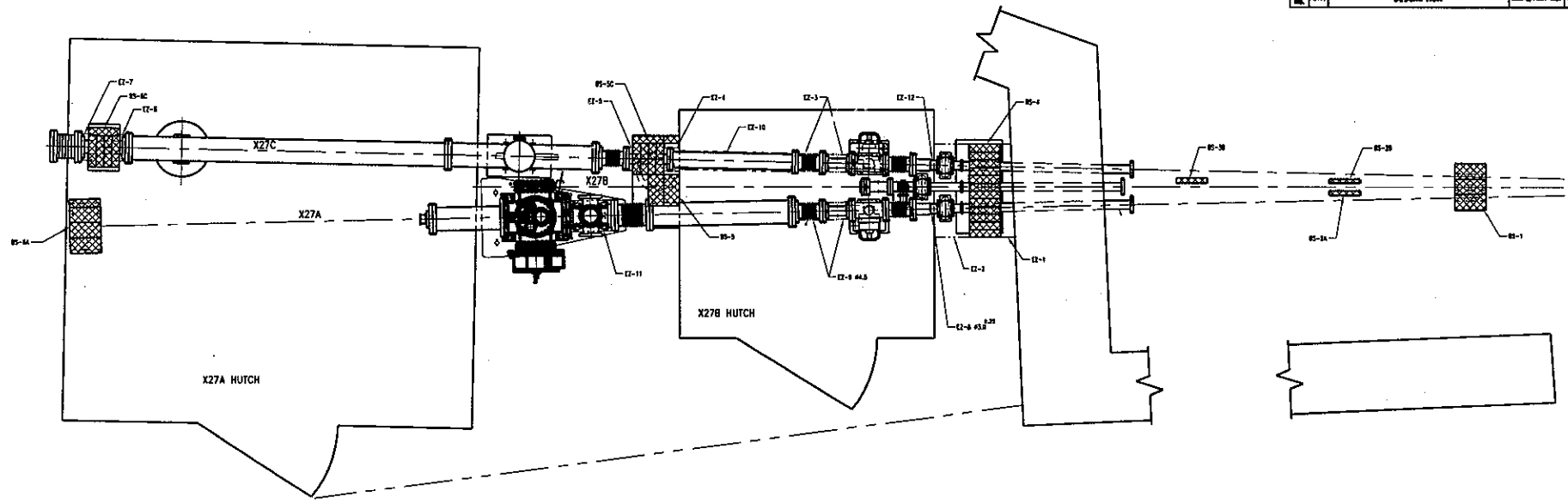

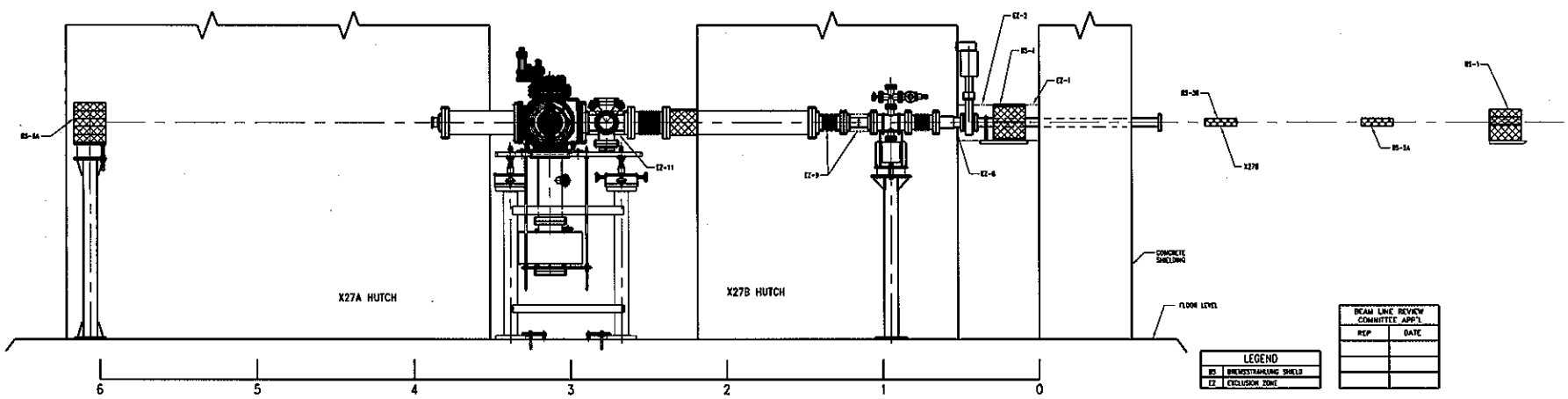

ELEVATION X27A

LEGEND	
BS	BREMSSTRAHLUNG SHIELD
EZ	EXCLUSION ZONE

BEAM LINE REVIEW COMMITTEE APP'L	
REP	DATE

REV.	ZONE	DESCRIPTION	BY	DATE	CHK	APP.
A	-	REVISED AND REDRAWN, CHANGE RISK LEVEL WAS A-3	C.S.	3-26-04	S.P.	A.L.

NSLS

CHANGE RISK LEVEL A-2

SLS-96.38

BROOKHAVEN NATIONAL LABORATORY
UPTON, N.Y. 11973

NSLS X-RAY BEAMLINE

BEAMLINE ASSEMBLY, X-27

SLS-96.38-001-5 H

COMPUTER REPRODUCIBLE

SHEET 1/10 SHEET 3 OF 3

SLS-96.38-001-5

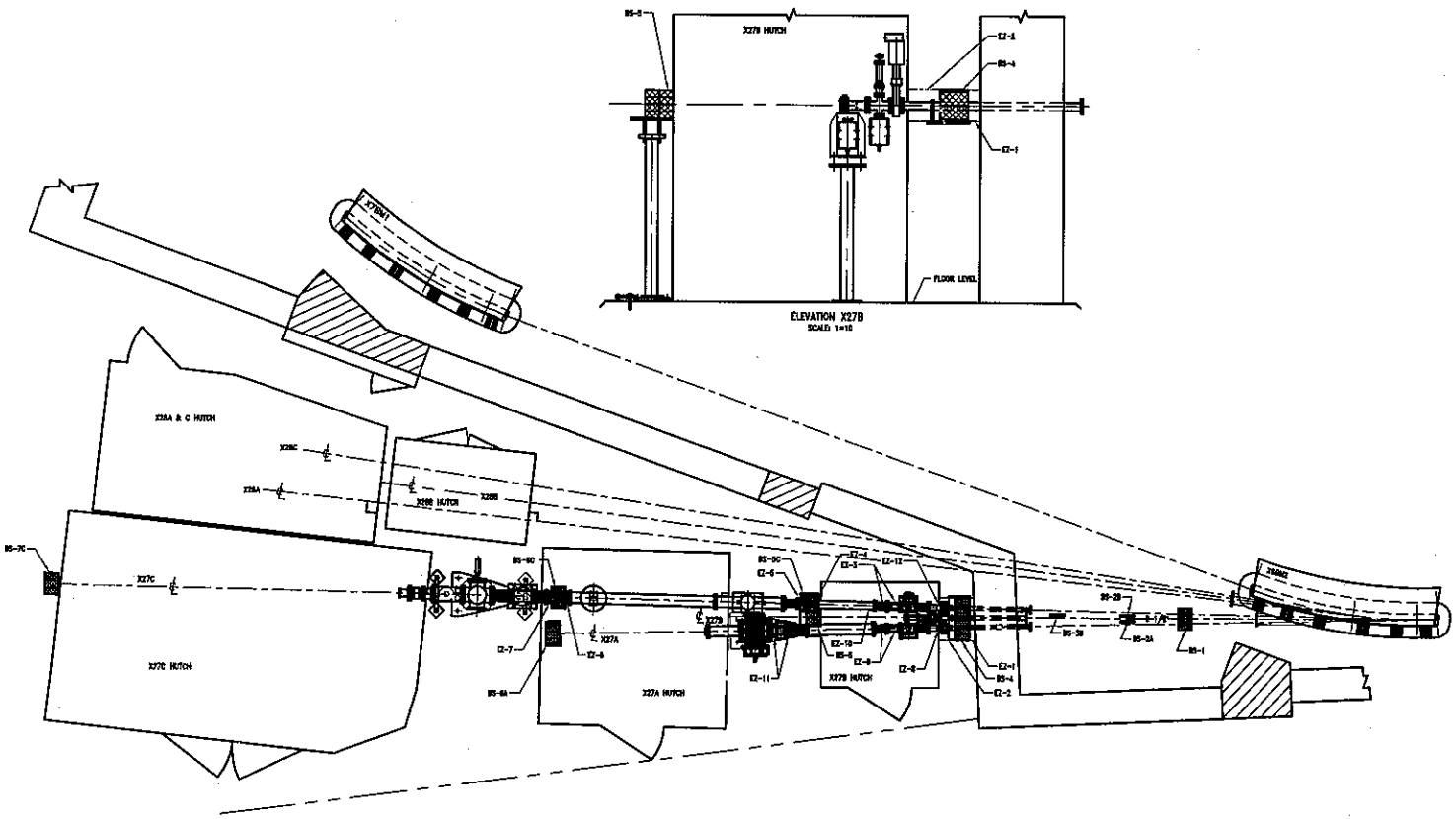

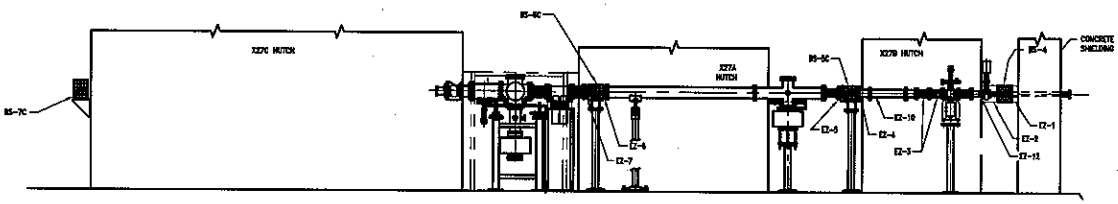

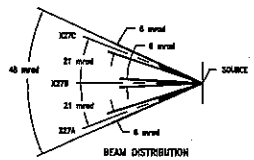

ITEM NO.	QTY.	DESCRIPTION	MAT'L/PART NO.	MANUFACTURER

NOTES:

1. THESE ARE ULTRA-HIGH VACUUM PARTS.
   a. USE OF CHLORINE OR SULPHUR BEARING OILS AND ABRASIVES IS PROHIBITED.
   b. USE ONLY CIMCOCL, BLASSOCUT 4000, MISSILE LUBE NO. 5, OR NSLS APPROVED EQUAL FOR LUBRICANT WHEN MACHINING.
2. LEAK TEST WITH A HELIUM MASS SPECTROMETER LEAK DETECTOR, TOTAL LEAK RATE NOT TO EXCEED 2 X 10 cm cm³ cm/Sec Hz.
3. CLEAN PER NSLS SPEC NO. SLS-07.12-1-1 OR APPROVED EQUIVALENT.
4. SEE DWG SLS-05.5-7-5, SHIELDING SCHEMATIC FOR SHIELDING OF X-27 BEAMLINES.

LEGEND	
B5	BREMSSTRAHLUNG SHIELD
E2	EXCLUSION ZONE

BEAM LINE REVIEW COMMITTEE APP'L	
REP	DATE

REV.	ZONE	DESCRIPTION	BY	DATE	CHK	APP.
H	-	REVISED AND REDRAWN, ESHAO RISK LEVEL WAS A-3	C.B.	8-26-04	S.P.	A.L.

NSLS

DRAWING RISK LEVEL	A-2	SLS-96.38
		BROOKHAVEN NATIONAL LABORATORY UPTON, N.Y. 11973
		NSLS X-RAY BEAMLINE
		BEAMLINE ASSEMBLY, X-27
		SLS-96.38-001-5 H
		COMPUTER REPRODUCIBLE
		SCALE 1/25 SHEET 1 OF 2

SLS-96.38-001-5